MILLER METAL, LLC

MANUFACTURED BY
GRABER POST BUILDINGS, INC.



Metal Board and Batten Installation Guide

Table of Contents

1. Overview

2. Handling & Storage

3. Required Tools

3. Cutting: Best Practices & Cautions

5. Safety Guidelines

6. Understanding Oil Canning

7. Wall Preparation

8. Trim Installation

9. Gable Splitting

10. Panel Installation

(740) 824-4040

sales@millermetalsales.com

25505 State Route 206
Walhonding, OH 43843

Overview

Thank you for choosing our Metal Board and Batten system. This guide is designed to provide you with theessential instructions and best practices to ensure a smooth and successful installation.

In this guide, youll find:

- Recommended tools
- Best practices for cutting
- Important safety precautions
- Wall preparation tips
- Trim and gable installation instructions
- Final panel installation details



If you have additional questions, feel free to contact our team at (740) 824-4040 or email us at sales@millermetalsales.com.

MILLER METAL, LLC

MANUFACTURED BY
GRABER POST BUILDINGS, INC.

(740) 824-4040
sales@millermetalsales.com
25505 State Route 206
Walhonding, OH 43843

Handling & Storage

Quality Inspection

Inspect all panels and trim upon delivery. Report any issues immediately so we can address them promptly.

Handling Instructions

To ensure safety during handling, longer panels should be lifted using multiple people or at several pick-up points. Heavy trim bundles should be broken apart to make them more manageable and reduce the risk of injury.

Storage Recommendations

GPB strongly recommends having a covered storage area ready at the jobsite before panels arrive. When placing your order, aim to schedule delivery as close as possible to the installation date to minimize the risk of damage from prolonged exposure on-site. The longer panels remain unused, the higher the chance of damage before installation.

If materials must be ordered in advance, proper storage becomes critical. Panels and trim should be kept in a dry, covered, and well-ventilated location. Exposure to moisture or direct sunlight before installation can compromise the finish, potentially causing water spots or surface rust. Panels should never be stored directly on the ground.

To protect the panels during shipping, a protective film is applied during manufacturing. However, this film is not UV-resistant and should not be exposed to direct sunlight. It must be removed promptly upon delivery. Delayed removal may lead to damage to the coating, including surface rust on the panel face.

If you have additional questions, feel free to contact our team at (740) 824-4040 or email us at sales@millermetalsales.com.

MILLER METAL, LLC
MANUFACTURED BY
GRABER POST BUILDINGS, INC.

(740) 824-4040
sales@millermetalsales.com
25505 State Route 206
Walhonding, OH 43843

Install Preparation

Tools Needed

To ensure efficient installation, the following tools are recommended:

- Screw gun (avoid impact drivers to prevent over-tightening)
- Hand shears
- Tape measure
- Rivet tool
- Chalk line
- Metal Nibblers
- Hand benders
- Straight edge

Cutting Practices

Cutting Do's:

- Use nibblers or hand shears as an alternative to saws.
- If cutting with circular saw, cut panels from the back side to protect the painted surface.
- Always remove metal shavings to prevent surface rust or finish damage.

Cutting Dont's:

- Never cut panels on top of one another.
- Avoid leaving metal shavings on the surface.
- Do not use abrasive blades.

MILLER METAL, LLC
MANUFACTURED BY
GRABER POST BUILDINGS, INC.

(740) 824-4040
sales@millermetalsales.com
25505 State Route 206
Walhonding, OH 43843

Oil Canning

What is it?

Oil canning refers to visible waviness in flat metal surfaces. It can result from improper installation, misalignment, or thermal movement.

How to Reduce Oil Canning:

- **Install panels with fasteners slightly loose to allow floating.**
- **Install on a solid sheethed surface. 1/2” or thicker.**
- **Choosing textured/frost metal, well help hide the visual of oil canning.**

Oil canning is not considered a valid reason for product rejection.

Wall Preparation

Wall Prep for Panel Installation

Before beginning your siding installation, it's important to start by properly preparing the wall. A solid substrate is essential for securing the panels and minimizing the risk of oil canning. We recommend using a minimum of 1/2" plywood as the substrate to provide a stable and reliable surface.

After the substrate is in place, apply a house wrap over the wall to add a layer of protection against moisture and water damage. We recomend that you do not use cap stapelers for the house wrap, this can create uneven services that can result in oil canning when installing panels. With both the substrate and house wrap installed, you're ready to proceed with installing the necessary trims for your siding.



MILLER METAL, LLC
MANUFACTURED BY
GRABER POST BUILDINGS, INC.

(740) 824-4040
sales@millermetalsales.com
25505 State Route 206
Walhonding, OH 43843

Trim Installation

Ratgaurd (Base Trim)

The base trim is typically going to be your first installed trim. It is attached to your skirt board or bottom plate of your wall framing. Be sure to allow a 1/4” gap at the bottom of the panel to the trim to allow for expansion.

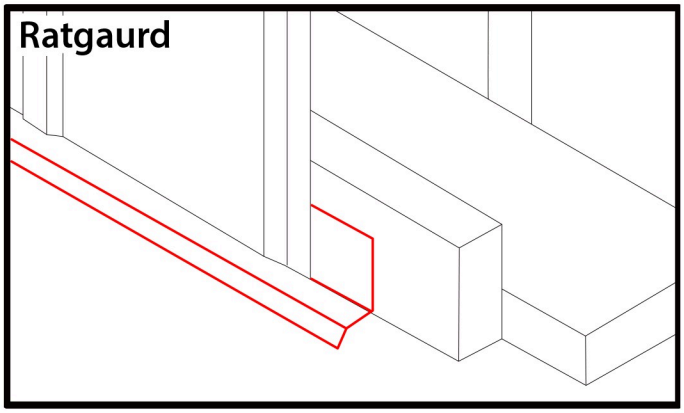

J-Channel w/ Utility Trim

When adding J-Channel around windows or door openings, you can install utility trim inside the j-channel to protect the panel’s cut edge and reduce movement or rattling. If the panel ends at the middle of a batten, you may need to install a furring strip behind it for support.

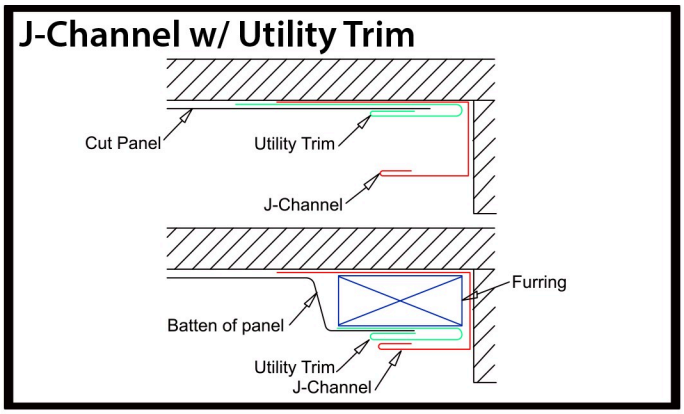

Outside Corners w/ Utility Trim

Install Outside Corners before securing any panels, ensuring the nailing flange is concealed behind the finished panels. These corners include an integrated J-Channel to receive the panels. Utility Trim should be used on both sides to protect the cut edges and prevent movement or oil canning. If a panel ends at the midpoint of a batten, it may be necessary to install a furring strip behind it for added support.

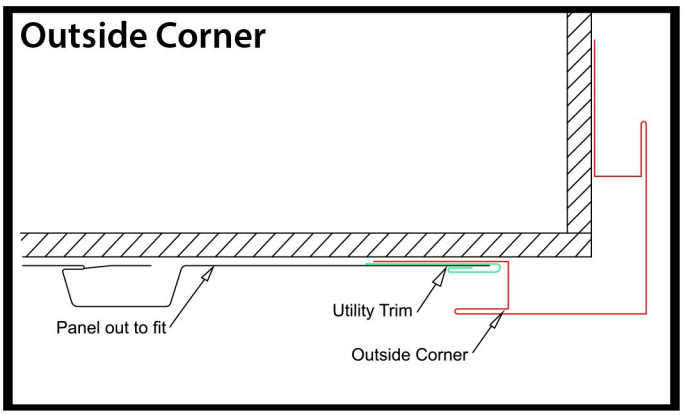

MILLER METAL, LLC
MANUFACTURED BY
GRABER POST BUILDINGS, INC.

(740) 824-4040
sales@millermetalsales.com
25505 State Route 206
Walhonding, OH 43843

Trim Installation

Z-Bar (Wainscot Trim)

The base trim is typically going to be your first installed trim. It is attached to your skirt board or bottom plate of your wall framing. Be sure to allow a 1/4” gap at the bottom of the panel to the trim to allow for expansion.

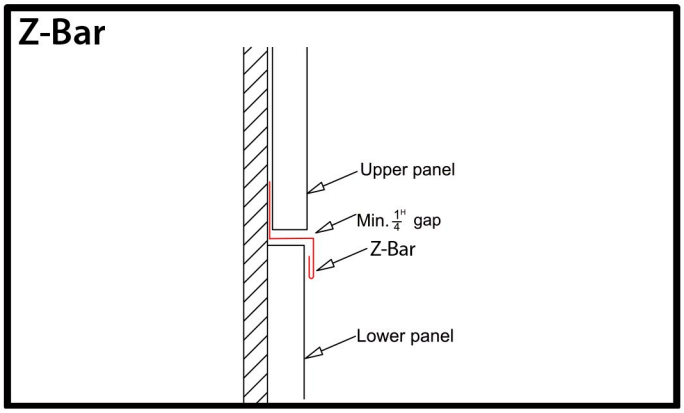

Panel Transition w/ Face

In certain situations, it may be necessary—or simply preferred—to create a horizontal break or 'transition' within the wall panels. This is often done at the start of a gable to enhance visual interest and add depth to large wall surfaces. Our standard transition has a 4-3/4” face, but this can be customized to your preference. Be sure to allow a 1/4” gap on the bottom panel and trim for expansion.

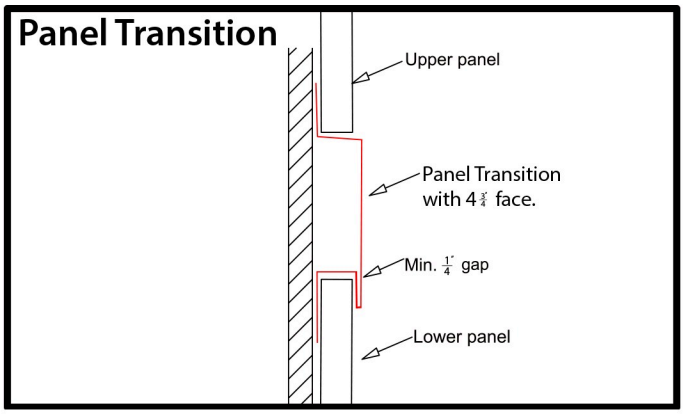

Overhang Trim (Soffit Channel)

Install overhang trim where your siding meets the soffit. Our standard trim is designed for board and batten soffit, but it can be special bent to accept whatever panel your project requires.

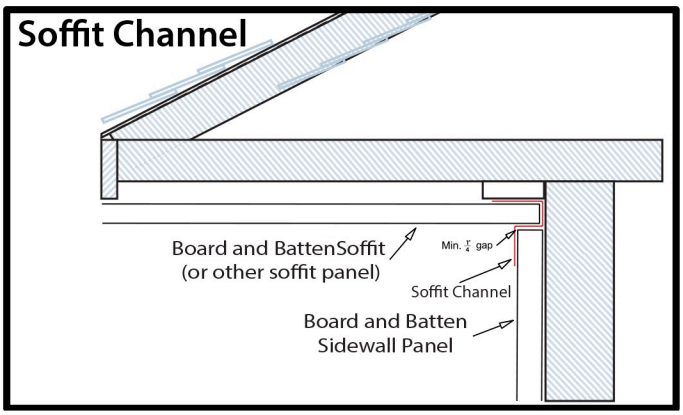

MILLER METAL, LLC
MANUFACTURED BY
GRABER POST BUILDINGS, INC.

(740) 824-4040
sales@millermetalsales.com
25505 State Route 206
Walhonding, OH 43843

Gable Splitting

Symmertrical Gable Installation

To ensure proper alignment, the center panel must line up with the center of the gable. The best approach is to begin installation at the center and work outward toward both the left and right sides.

Start by removing the nailing flange from a full-length panel (see illustration). Fasten this flange to the center of the gable end, making sure it is precisely aligned so the batten will match the gable centerline.

Next, cut the batten portion from another full-length panel (see illustration). Attach this piece to the sub-strate by tucking its cut edge into the open hem of the previously installed nailing flange. At this point, there should be two nailing flanges with open hems facing each other.

To complete the center starter panel, clip a full-width panel into the center nailing flange and fasten it to the substrate as you would with standard field panels. Once installed, you can continue panel installation outward to both the left and right sides (see illustration).

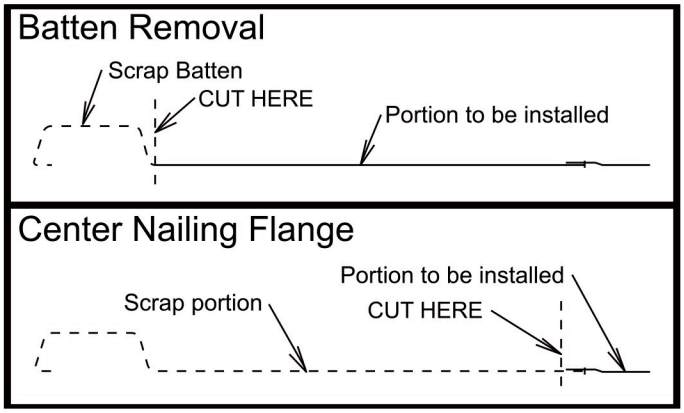

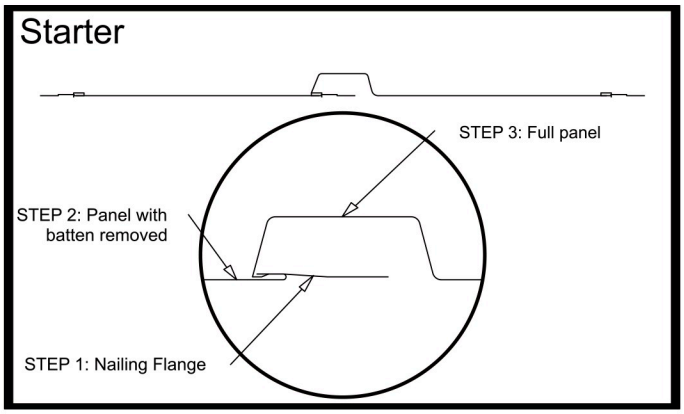

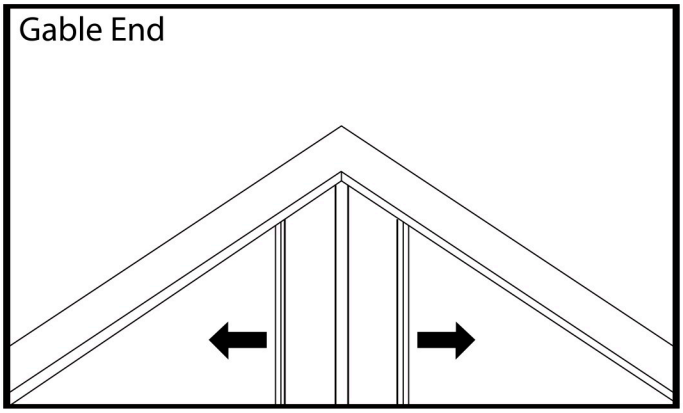

MILLER METAL, LLC
MANUFACTURED BY
GRABER POST BUILDINGS, INC.

(740) 824-4040
sales@millermetalsales.com
25505 State Route 206
Walhonding, OH 43843

Panel Installation

Panel Fasteners

When installing board and batten panels, it is essential to allow space for vertical expansion. Avoid over-tightening the fasteners—panels should remain slightly loose to permit movement or "floating."

Fasteners must be placed in the center of the fastening slots on the nailing flange. To ensure proper installation, leave approximately a 1/32" gap between the fastener head and the panel. Our panels are recommended to be installed with a 1” wafer screw or “pancake” screw.

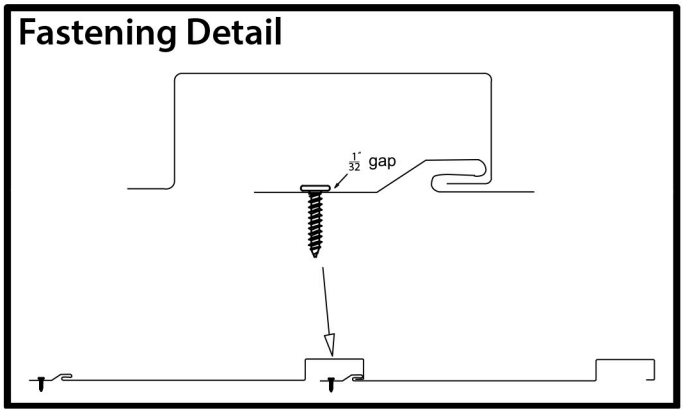

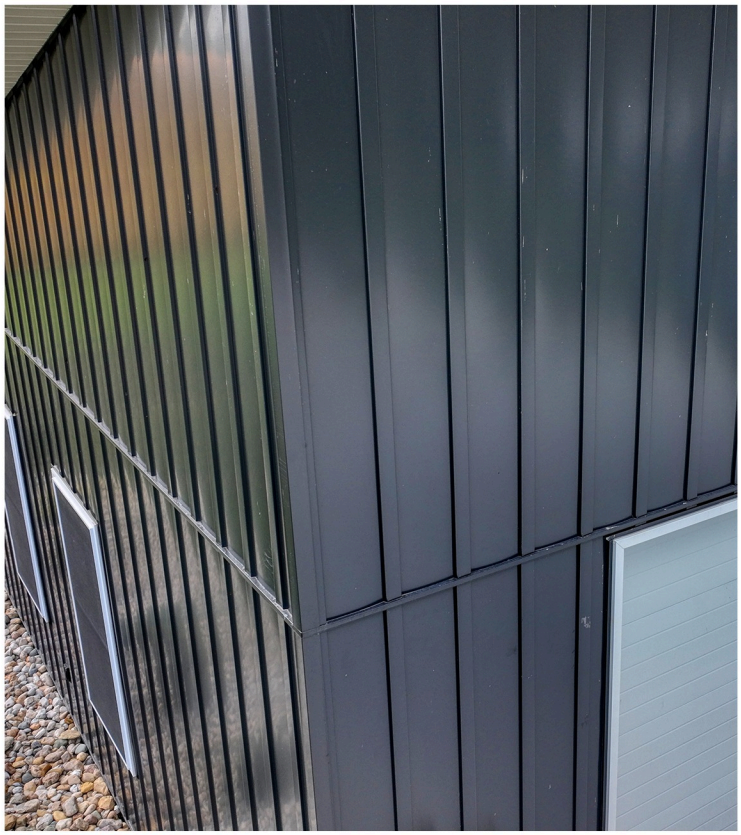



MILLER METAL, LLC

MANUFACTURED BY
GRABER POST BUILDINGS, INC.

(740) 824-4040
sales@millermetalsales.com
25505 State Route 206
Walhonding, OH 43843